1FDF**L**-2/4 Flow Dividers

Displacement		SAE Port		Minimum Flow (sec)		Maximum Flow (sec)		Cont. Diff Between Pressure Inlet (outlet)		Maximum Outlet Pressure Each Section	
in³	cm³	inlet	outlet	gpm	lpm	gpm	lpm	psi	bar	psi	bar
0.097	1.60	sae6	sae6	0.8	3.0	1.7	6.40	1800	124	3500	240
0.129	2.13	sae8	sae8	1.2	4.5	2.5	9.50	1800	124	3500	240
0.194	3.18	sae8	sae6	1.7	6.4	4.5	13.2	1800	124	3500	240
0.258	4.24	sae10	sae10	2.5	9.5	5.0	18.9	1800	124	3500	240
0.323	5.29	sae10	sae10	3.0	11.4	6.0	22.7	1800	124	3500	240
0.388	6.36	sae10	sae10	3.5	13.2	7.0	26.5	1600	110	3500	240
0.453	7.42	sae10	sae10	4.0	15.1	8.0	30.3	1300	90	3500	240
0.517	8.42	sae10	sae10	4.5	17.0	9.0	34.1	1200	83	3500	240

Dimensions

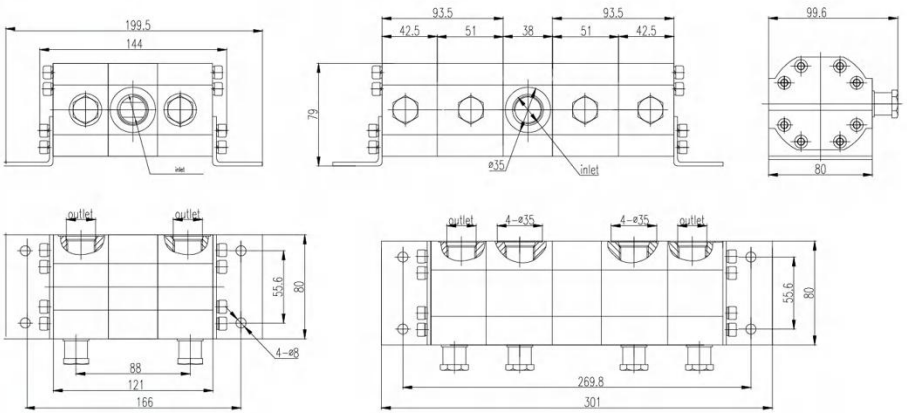

Schematic Diagrams

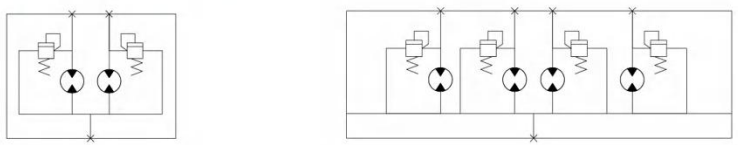

1AFDF** L**- Y-V Flow Dividers

Displacement	SAE Port		Minimum Flow	Maximum Flow	Cont. Diff Between Pressure Inlet/Outlet
	Inlet	Outlet			
2.0	G1/2	G3/8	1.0	4.0	200
3.0	G1/2	G3/8	1.5	6.0	200
4.1	G1/2	G3/8	2.1	8.2	200
5.1	G1/2	G3/8	2.55	10.2	200
6.1	G1/2	G3/8	3.05	12.2	200
7.0	G1/2	G3/8	3.50	14.0	200

Dimensions

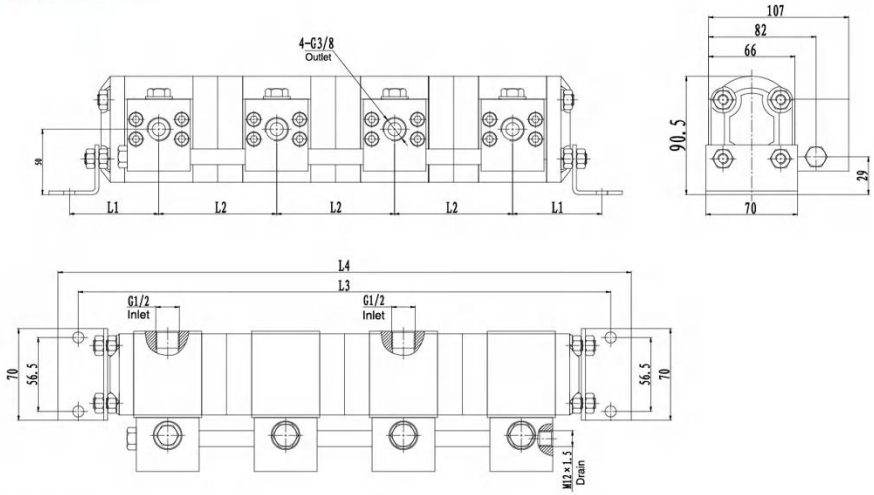
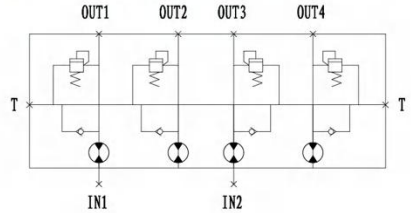
Schematic Diagram